ZANUSSI PROFESSIONAL

ITEM #

MODEL #

NAME #

SIS #

AIA #

Drop-In
Drop-in bain-marie, with one well (2 GN container capacity)

341000 (D01H2) Drop-in bain-marie, with one well (2 GN container capacity)

Short Form Specification

Item No.

Designed to be positioned in flush installation providing improved cleanability and suitable for modern design installations. Designed to serve the food in gastronorm containers with a maximum height of 200mm. Automatic water refill guarantees constant heating performances and prevent unit breakage. Electronic overheating protection. Digital control with temperature display with precise adjustment (0,1° C). Fully compliant HACCP digital controls include visible alarms. Designed to work with both hot and cold inlet water. Etched foil heating elements to maximize heat transmission for reduced warm-up times. Well in 304 AISI stainless steel with rounded corners to facilitate cleaning operations. The well is also equipped with a drain hole. Well bottom is inclined to guarantee full well drainage. 19mm thick glass wool isolated with galvanize sheet guarantees excellent well insulation to reduce energy dispersion. Heating elements connected to the well bottom include safety thermostat. Food introduced at the correct temperature maintains its core temperature according to Afnor Standards.

APPROVAL:

Main Features

- Electronic overheating protection.
- Designed to serve the food in gastronorm containers.
- Suitable for GN 1/1 containers with a maximum height of 200 mm.
- Automatic water refill guarantees constant heating performances and prevent unit breakage.
- Precise temperature control and setting at 0,1°C .
- As standard the product comes with digitally controlled thermostat which is in line of HACCP norms and provides visual alarm as a warning of the increasing or decreasing temperatures.
- Designed to work with both hot and cold inlet water.
- It is possible to transform one of the GNs to soup dispenser with the available accessory.
- CB and CE certifed by a third party notified body.
- Designed to be positioned in flush installation providing improved cleanability and suitable for modern design installations.
- Available drop-in dimensions: 2, 3, 4, 5, 6 GN.
- Food introduced at the correct temperature maintains its core temperature according to Afnor Standards.

Construction

- Heating elements connected to the well bottom include safety thermostat.
- Well bottom is inclined to facilitate water drainage.
- IPx4 water protection.
- Well in 304 AISI stainless steel with rounded corners to facilitate cleaning operations. The well is also equipped with a drain hole.
- Electronic control with temperature display.

Sustainability

- 19mm thick rock wool isolated with galvanize sheet guarantees excellent well insulation to reduce energy dispersion.
- Etched foil heating elements to maximize heat transmission for reduced warm-up times.

Drop-In
Drop-in bain-marie, with one well (2 GN container capacity)

Rear side

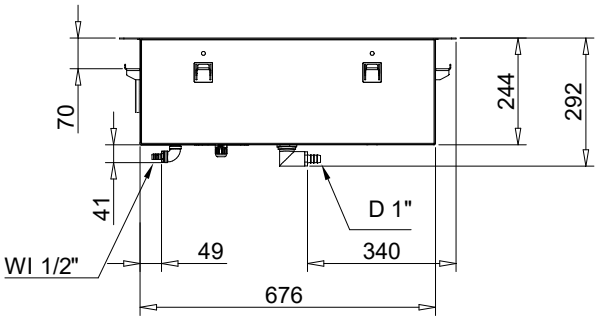

Side

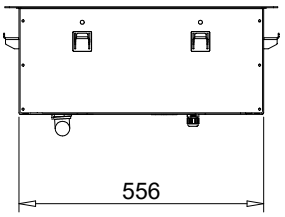

D = Drain
EI = Electrical inlet (power)
WI = Water inlet

Top

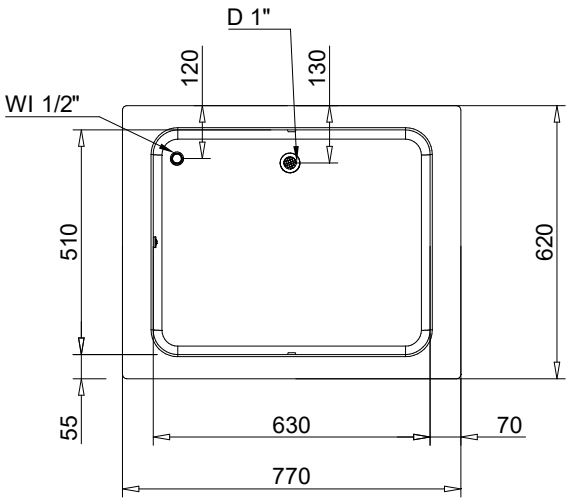

Electric

Supply voltage:	
341000 (D01H2)	220-240 V/1N ph/50/60 Hz
Electrical power max.:	2.02 kW

Water:

Water inlet "CW" connection:	1/2"
Drain line size:	1"

Key Information:

External dimensions, Width:	770 mm
External dimensions, Depth:	620 mm
External dimensions, Height:	260 mm
Net weight:	21.4 kg
Shipping weight:	42 kg
Shipping height:	380 mm
Shipping width:	660 mm
Shipping depth:	810 mm
Shipping volume:	0.2 m³
Set temperature:	+85 / +95 °C

Sustainability

Noise level:	0 dBA

The company reserves the right to make modifications to the products without prior notice. All information correct at time of printing.

2024.10.08

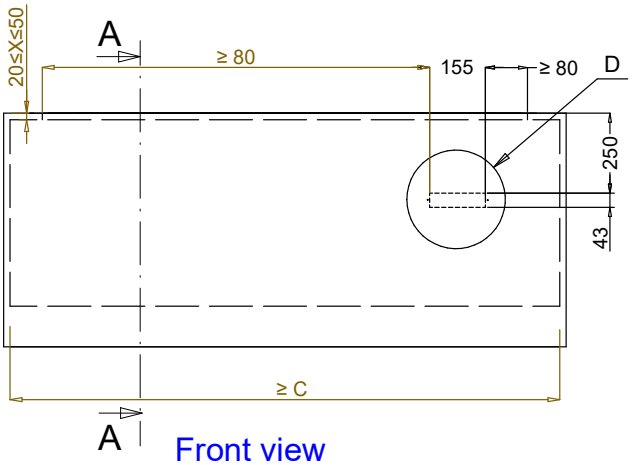

Front view
Scala: 1:10

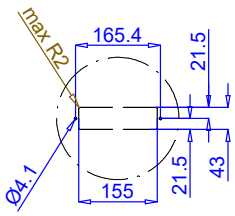

Dettaglio D
Scala 1:7

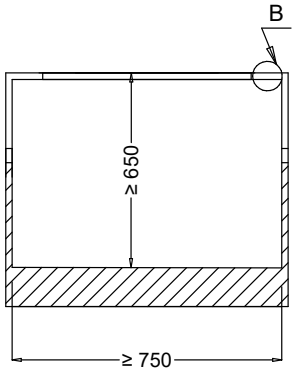

Section Cut A-A
Scala: 1:10

ONLY FOR FLUSH INSTALLATION

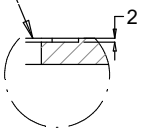

Dettaglio B
Scala 1:2

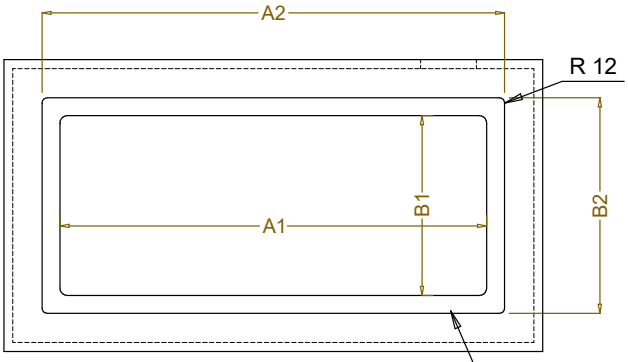

Top view
Scala: 1:10

ONLY FOR FLUSH INSTALLATION

CAPACITY	CUTOUT		LOWERING FOR FLUSH INSTALLATION		C
	A1	B1	A2	B2	
2GN	700	580	774	624	880
3GN	1030		1104		1200
4GN	1350		1424		1530
5GN	1670		1744		1850
6GN	2000		2074		2180

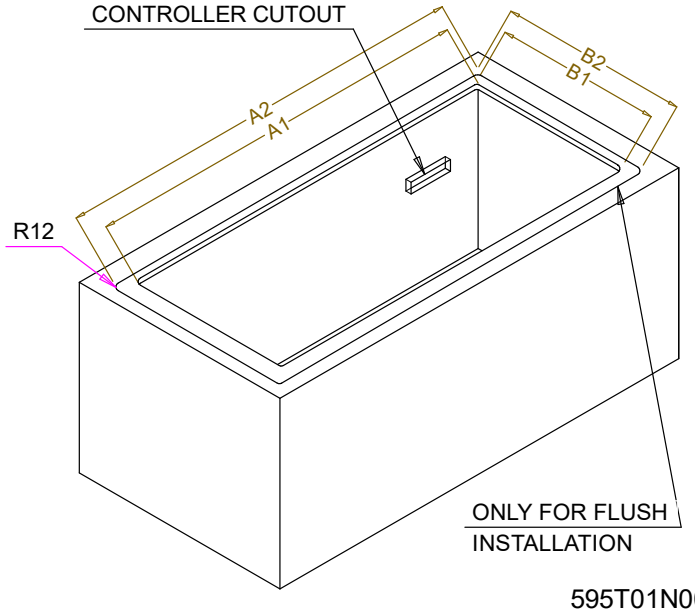

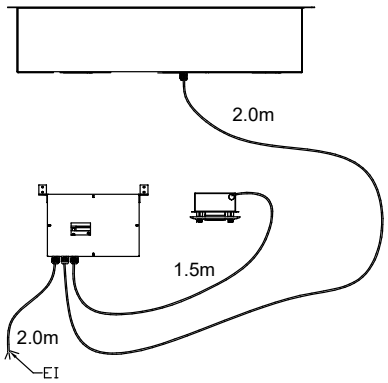

595T01N00 - WATER BAIN MARIE SINGLE WELL

The company reserves the right to make modifications to the products without prior notice. All information correct at time of printing.

2024.10.08